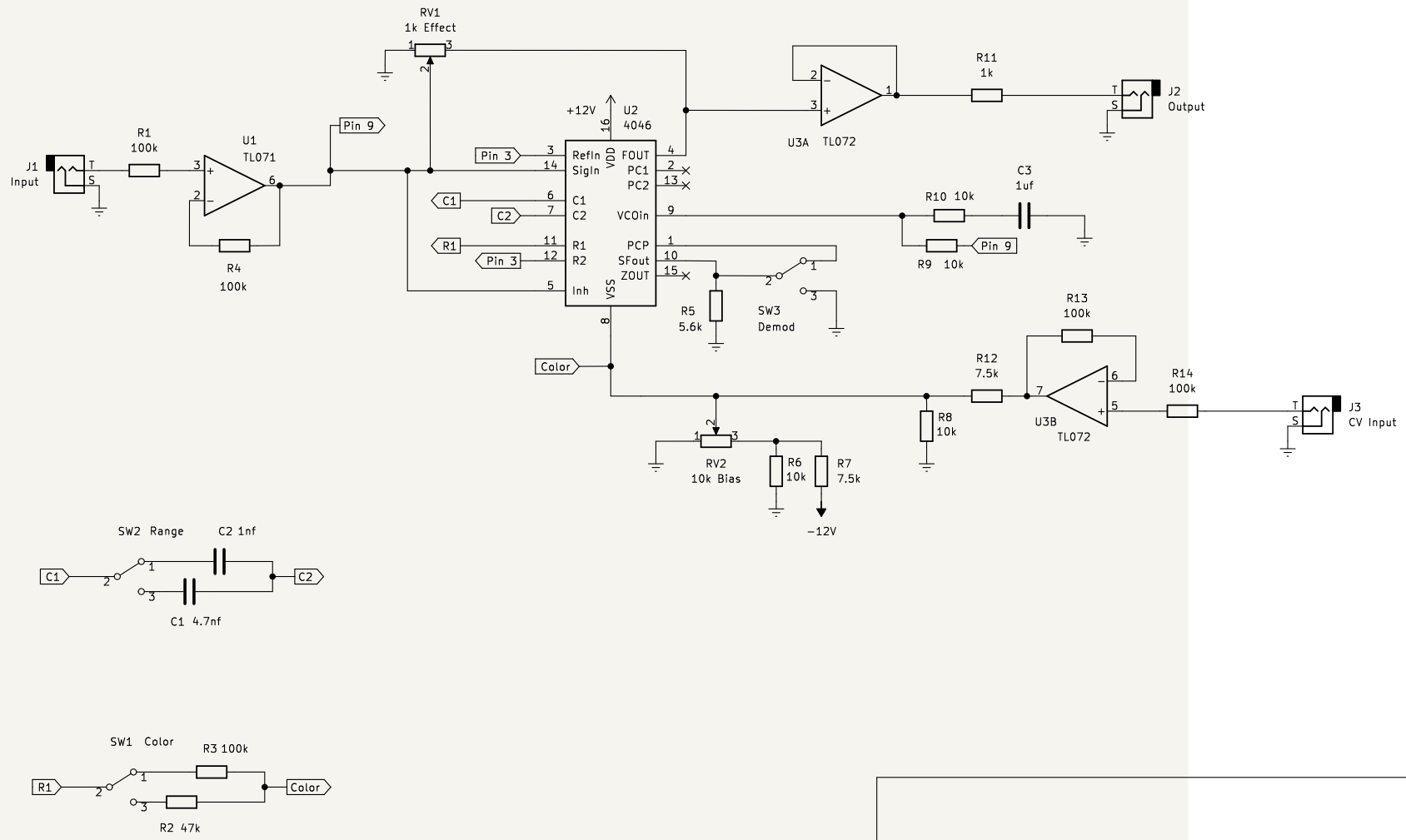

Mechlab Productions

Sheet: /

File: D-MOD.kicad_sch

Title: D/MOD

Size: A4	Date: 2024-01-05	**Rev: v1.0**
KiCad E.D.A. kicad (6.0.9)		Id: 1/1